CoreStation Series

Future-Ready Intelligent Controller

Suprema CoreStation Series sets a new standard in access control by combining centralized intelligence with exceptional versatility. Whether you need advanced fingerprint recognition matching or streamlined card-based access, CS-40 and CS-20 models provide scalable, secure, and future-ready solutions—all powered by the robust BioStar 2 platform. From global enterprises to agile SMBs, CoreStation is the heart of secure infrastructure that grows with you.

suprema
SECURITY & BIOMETRICS

Key Features

Centralized Access Control with BioStar 2 Platform

CS-40 and CS-20/CS-20P operate seamlessly within the BioStar 2 platform, offering centralized management of users, devices, access rights, and logs. This unified system architecture enhances operational efficiency and simplifies scaling.

High Scalability and Flexible Deployment

From small offices to enterprise campuses, CoreStation series adapts to various project sizes. CS-40 is ideal for large-scale expansions, while CS-20/ CS-20P provides cost-effective deployment for smaller installations—all under a consistent management platform.

*Only CS-20P model supports PoE+ and the SAM Slot, enabling simplified installation with a single cable and enhanced security through tamper-resistant smart card authentication.

Robust Security and Serial Connection Failure Resilience

All CoreStation models support TLS 1.2 encrypted communication and offline authentication modes, ensuring reliable access control even during serial connection failures. CS-20P also enhances smart card security with a dedicated SAM slot.

Model Overview

Suprema's CoreStation series provides centralized access control solutions designed for businesses of all sizes.
Whether you require advanced biometric functionality or simple card-based authentication, CoreStation family offers the right fit :

- CS-40: High-security, large-scale systems requiring centralized fingerprint recognition.
- CS-20: Cost-effective, scalable deployments for mid-to-large size facilities with card-based or mobile access.
- CS-20P: Sites requiring secure smart card authentication with SAM Slot, simple deployment, and flexible power options.

Recommended For

Model	Deployment Type	Recommended Industries
CS-40	Provide centralized fingerprint recognition and support large-scale system expansion	National and public institutions, large corporate HQs, airports, critical infrastructure, high-tier data centers, government and defense sites
CS-20	CS-20 is a compact 2-door control system with built-in relays and inputs. It is ideal for simple, cost-efficient installations while offering a scalable access control solution for mid-to-large size facilities using card-based or mobile credentials—ready to meet the demands of enterprise environments	Corporate offices, distribution centers, universities, hospitals, logistics hubs, enterprise buildings without biometric requirement
CS-20P	Features a SAM Slot for secure smart card authentication, simplified deployment, and flexible power options	Clinics, construction zones, franchise chains, smart retail, temporary/mobile access points, tech-forward SMBs

Configuration | CS-40

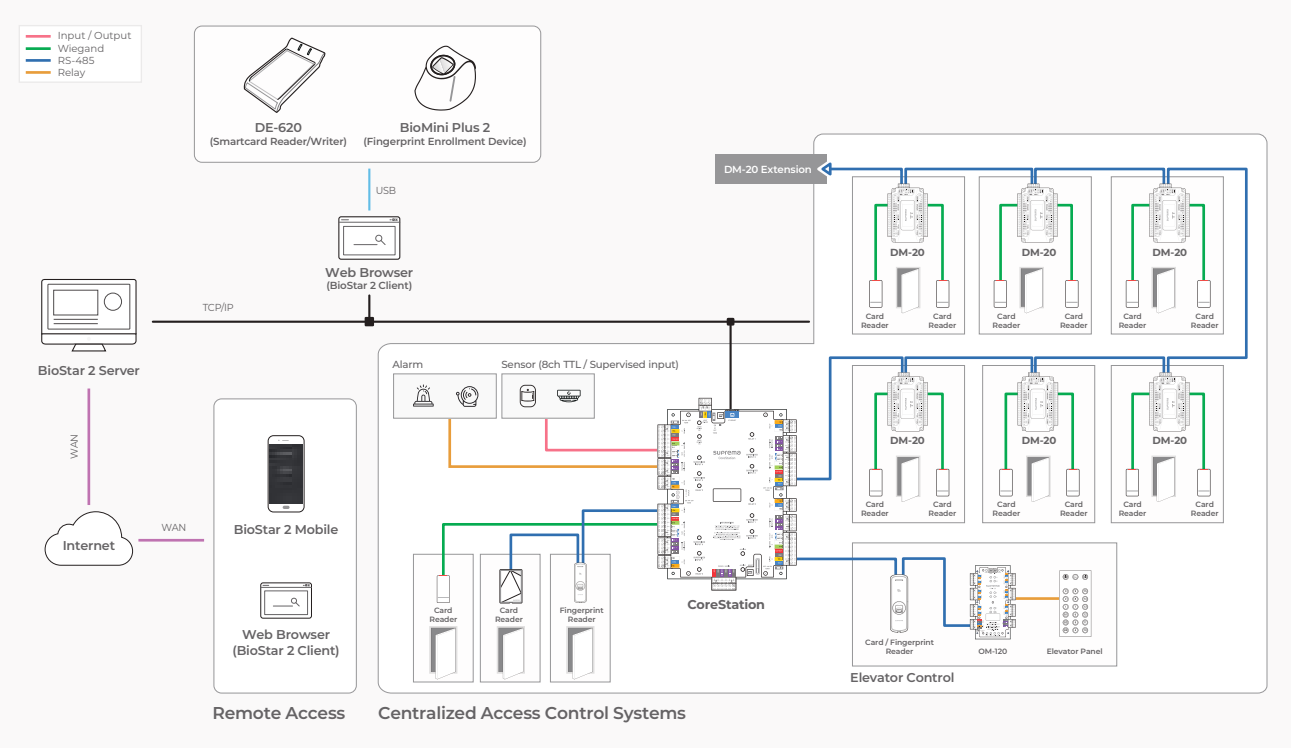

Configuration | CS-20/CS-20P

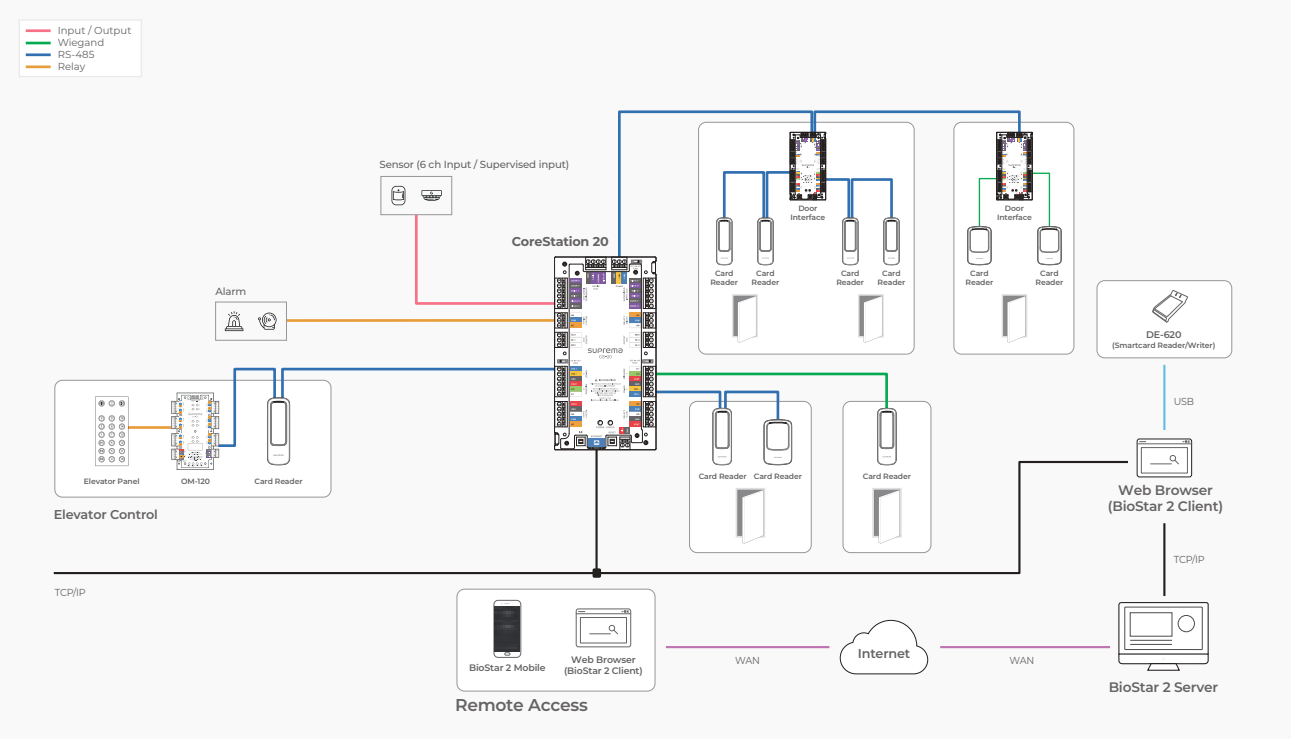

Specifications

Category	CS-40	CS-20	CS-20P
Product			
Max. User	500,000(1)	500,000	
Max. Credential (1:N)	Face: 4,000(2)	-	
Max. Credential (1:1)	Face: 30,000(2) Card: 500,000 PIN: 500,000	Card: 500,000 PIN: 500,000	
Max. Text Logs	5,000,000	5,000,000	
Ethernet	10/100 Mbps, Auto MDI/MDI-X	10/100 Mbps, Auto MDI/MDI-X	
RS-485	5 ch	3 ch	
RS-485 Communication Protocol	OSDP V2 compliant	OSDP V2 compliant	
Wiegand	4 ch	2 ch	
Relay Output	4 (via module)	4 built-in	
Supervised Input	8 ch(3)	6 ch(3)	
AUX Input	2 ch (Power Fail, Tamper)	3 ch (Power Fail, Tamper, Fire)	
SAM Slot	-	-	Supported
Max. Slave Devices (RS-485)	64 (max 31/port)	4 devices	
Max. Wiegand Devices	132 (with DM-20)	2	
CPU	1.4 GHz Octa Core	1.2 GHz Single Core	
Memory	8 GB Flash + 1 GB RAM	4 GB Flash + 256 MB RAM	
Crypto Chip	Supported	Supported	
LED	Multi-color	Power: Red, Status: Multi-Color	
Operating Temperature	0°C ~ 50°C (32°F ~ 122°F)	0°C ~ 50°C (32°F ~ 122°F)	
Tamper	Optional (ENCR-10)	-	
Power	12 VDC/24 VDC, Max 0.2A/0.1A	12 VDC/24 VDC, Max 2.8A/1.4A	
Dimensions (W x H x D mm)	150 x 214 x 21	100 x 190 x 33.9	
PoE+	-	-	Supported
Certifications	CE, UKCA, KC, FCC, RCM, RoHS, REACH, WEEE, ETL Listed to UL 294	CE, UKCA, KC, FCC, RCM, IC, RoHS, REACH, WEEE, EAC	

(1) The number of users registered without any credential data.
(2) FaceStation 2 and FaceLite are available only.
(3) Input or Supervised Input selectable.

• If CoreStation is a master device and a device with a fingerprint sensor is connected as a slave, the slave device can be used for fingerprint authentication.
- Max. Fingerprint Credentials (1:N): 100,000 / Max. Fingerprint Credentials (1:1): 500,000

Suprema Inc.
17F Parkview Tower, 248, Jeongjail-ro, Bundang-gu, Seongnam-si, Gyeonggi-do, 13554, Republic of Korea
T +82 31 783 4502 **W** www.supremainc.com

For more information visit our website below by scanning the QR code.
https://www.supremainc.com/en/about/contact-us.asp

©2025 Suprema Inc. Suprema and identifying product names and numbers herein are registered trade marks of Suprema Inc. All non-Suprema brands and product names are trademarks or registered trademarks of their respective companies. Product appearance, build status and/or specifications are subject to change without notice. [SUPREMA-AHL-CSS-EN-REV01]